We reserve all rights to this drawing, to any patents or patent registrations related hereto, and to the duplication, retransmission by third parties and misc. use. Any use of this drawing is not permitted without the written consent of STABILUS.

Intended for internal use and customer

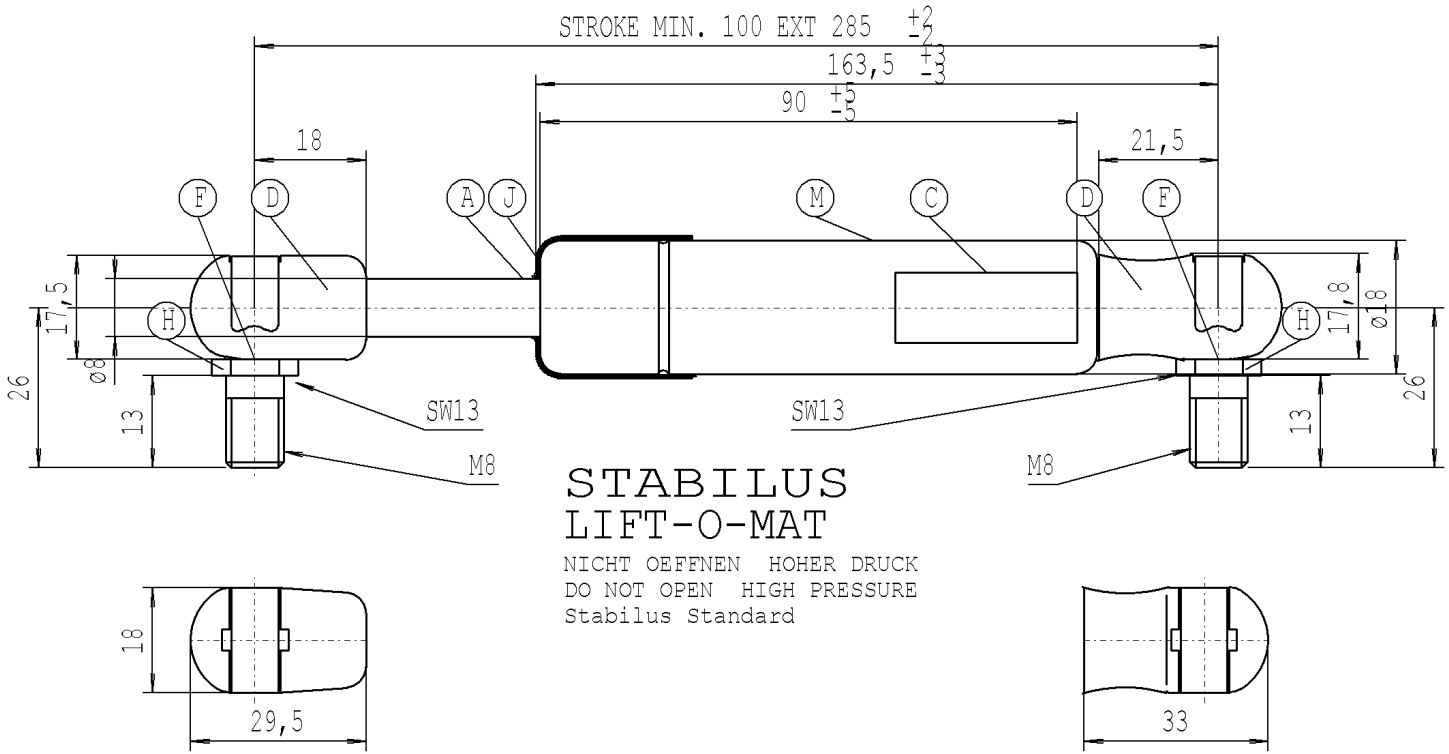

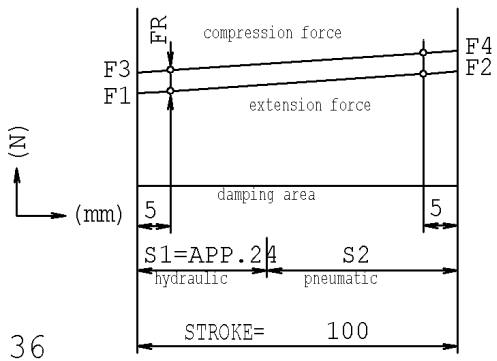

X=F2/F1=1,36
FRmax=F3-F1

Forces (statically measured)

F1 (N)	F4 max (N)	FR max (N)
extension force 200±15	compression force 360	friction 45

A Nislide black
C print white
D Releasing torque min. 3.0 Nm
F greased
H black passivated
J border flange oiled

M black painted

-The warning label must not be removed or obscured.
-the Gas Spring must not be mechanically modified or damaged.
-Extension speed VS2=0,10-0,30 (m/s)

-compression and extension forces measured acc. to STAB-Spec. 10009033
-Extension speed measured according to STAB-Spec. 10005451
-Spring test with piston rod downwards

-Line up connections permissible deviation ± 5 DEG
-Protect piston rod from dirt, paint and damage
-Disposal acc. to STAB-Spec.10009375
-Drawing not true-to-scale
-Observe installation instructions according to STAB-Spec. 10005593
-Component testing gas spring acc. STAB-Spec. 10010035
-Ball socket to suit ball stud DIN 71803 ø10
-Disassemble ball-stud to STAB-Spec.10006399
-Installation: With piston rod down to ensure best possible durability performance of the gas spring.

-Permissible operating temperature range -30°C to +80°C

Unregistered Copy
Print-out is not subject to the modification service

CHANGE	
NEW	SERIE
OLD	VERSUCH
CHG.NO.	616502
NAME	27.08.14 SCHNASS
NO.	1

STABILUS

Modifications in favour of technical process reserved

DRAWING		CHECKED
DATE 19.08.2014	NAME M.Gosman	

DIMENSIONS WITHOUT TOLERANCE +/-1

LIFT-O-MAT

03 01 0816 10 100

Document No. 10214649

134815

E